Western Products, PO Box 245038, Milwaukee, WI 53224-9538 • www.westernplows.com

March 1, 2020
Lit. No. 43683, Rev. 01

WESTERN®

PILE DRIVER™

PILE DRIVER™ Snowplow

8' – 69950; 10' – 69955;
Box Plow for Skid-Steer Loaders

Parts List

FACTORY ORIGINAL
WESTERN®
PARTS AND ACCESSORIES
DESIGNED • TESTED • APPROVED

A DIVISION OF DOUGLAS DYNAMICS, LLC

Blade Components

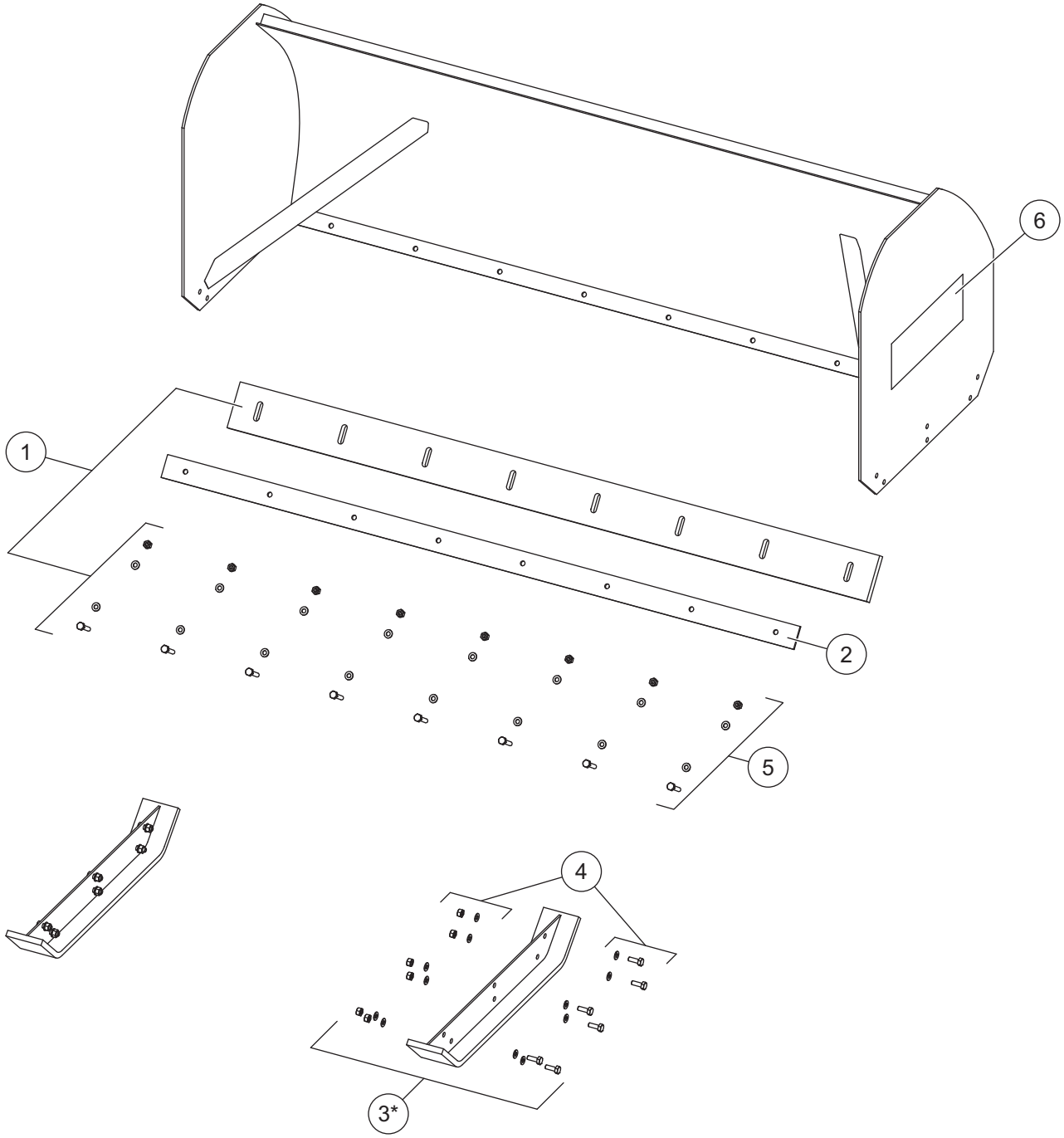

69950/69955 Blade Components							
Item	**Part**	**Qty**	**Description**	**Item**	**Part**	**Qty**	**Description**
1	72061	1	8' Rubber Cutting Edge Kit (incl. item 5)	ns	69952†	1	Label – Logo, PILE DRIVER, 8' Blade Front
	72062	1	10' Rubber Cutting Edge Kit (incl. item 5)	ns	69956†	1	Label – Logo, PILE DRIVER, 10' Blade Front
2	72072	1	8' Bolting Bar	ns	72049*†	2	Wear Shoe Kit – Super Duty (incl. item 4)
	72073	1	10' Bolting Bar				
3	72047*	2	Wear Shoe Kit – Standard (incl. item 4)	ns	72052*†	2	Wear Shoe Kit – Self Leveling, Standard (incl. item 4)
4	72063	2	Wear Shoe Hardware Kit	ns	72054*†	2	Wear Shoe Kit – Self Leveling, Super Duty (incl. item 4)
5	72074	1	Cutting Edge Hardware Kit				
6	69951	2	Label – Logo, PILE DRIVER	ns	72069†	1	Level Gauge
Item 4			**72063 Wear Shoe Hardware Kit**				
		6	5/8-11 x 2 Hex Cap Screw G5			12	5/8 Flat Washer
		6	5/8-11 Hex Locknut GB				
Item 5			**72074 Cutting Edge Hardware Kit**				
		10‡	1/2-13 x 2-1/2 Hex Cap Screw G5			20‡	1/2 Flat Washer
		10‡	1/2-13 Hex Locknut GB				
ns = not shown							G = Grade

* Single shoe per kit.
† Accessory only.
‡ Not all fasteners used for all blade sizes.

Western Products
PO Box 245038
Milwaukee, WI 53224-9538
www.westernplows.com

A DIVISION OF DOUGLAS DYNAMICS, LLC

Copyright © 2020 Douglas Dynamics, LLC. All rights reserved. This material may not be reproduced or copied, in whole or in part, in any printed, mechanical, electronic, film, or other distribution and storage media, without the written consent of Western Products. Authorization to photocopy items for internal or personal use by Western Products outlets or snowplow owner is granted.

Western Products reserves the right under its product improvement policy to change construction or design details and furnish equipment when so altered without reference to illustrations or specifications used. Western Products or the vehicle manufacturer may require or recommend optional equipment for snow removal. Do not exceed vehicle ratings with a snowplow. Western Products offers a limited warranty for all snowplows and accessories. See separately printed page for this important information. The following are registered (®) or unregistered (™) trademarks of Douglas Dynamics, LLC: PILE DRIVER™, WESTERN®.

Printed in U.S.A.